BELL 11 GRID

JUN 2019

installation instructions

indoor/ interior lighting

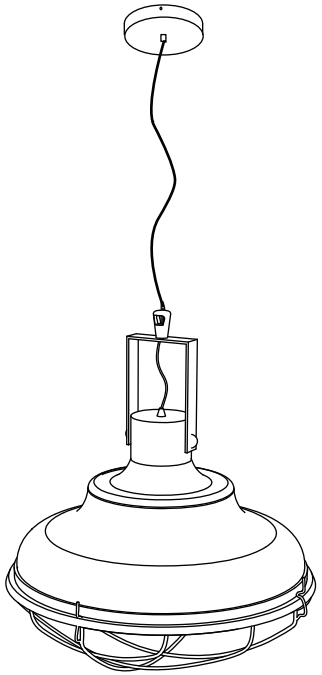

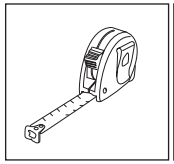

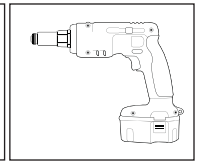

1 Installation

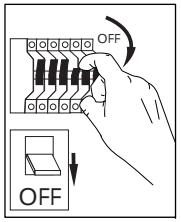

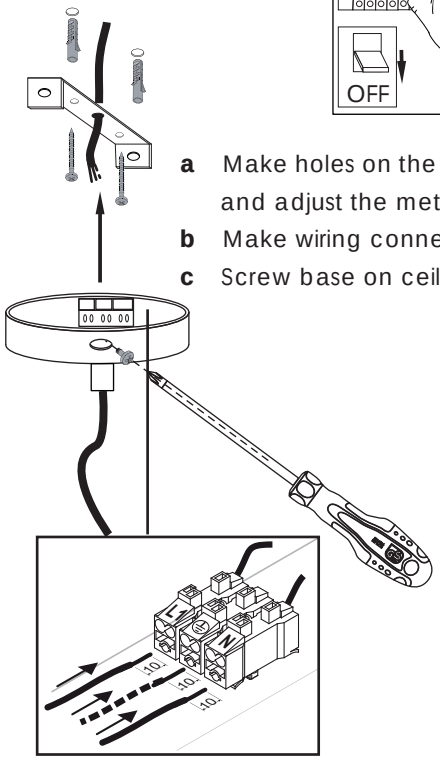

a Make holes on the ceiling and adjust the metal strip.

b Make wiring connections.

c Screw base on ceiling.

2 lamp placement/replacement

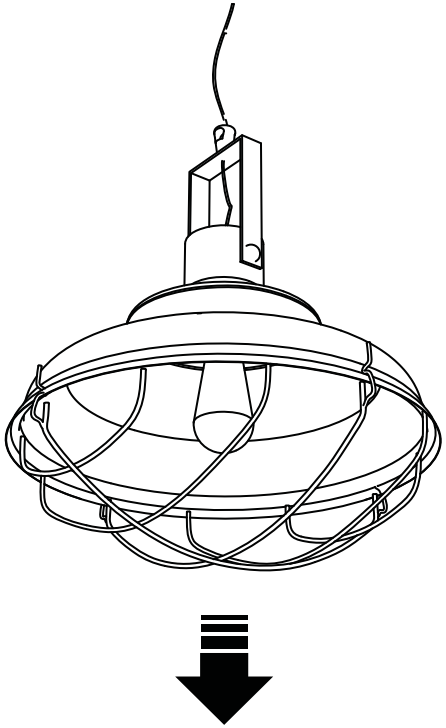

Remove the grid to access lamp

3

Place the lamp and fit the grid back to the fixture.

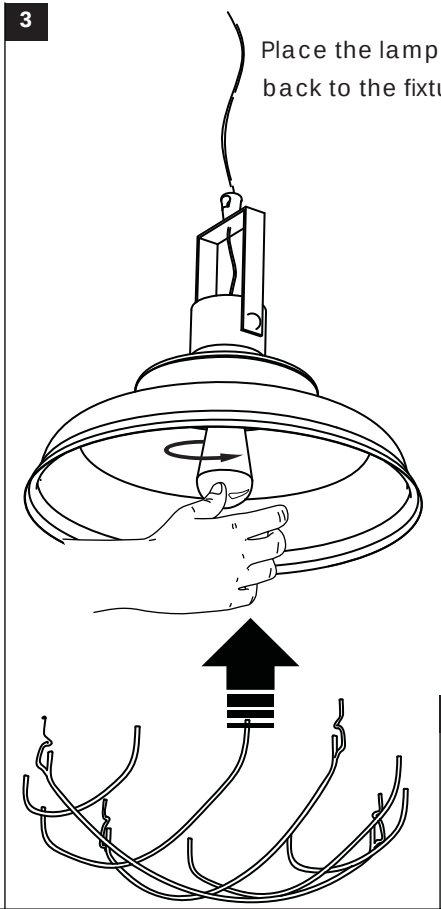

4

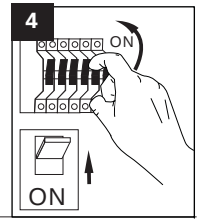

USER INSTRUCTIONS

- The installation of the unit must be done by a qualified electrician.
- The unit must be earthed in case an earth connecting point exists.
- Ensure that the mains is switched off during servicing.
- Do not use bulb(s) bigger than the indicated on units name-plate or packaging.
- Ensure that after the installation, the unit is properly fixed and the cable clamps (if exist) are well tightened.
- Manufacturer will not accept liability for injury or damage resulting from incorrect use or installation
- The unit is not intended to operate in loop connection.
- Wall plugs and terminals are not included.

BRIGHT SPECIAL LIGHTING

Factory

5 Kefalovrisou Str., Monomati, Acharnai, P.O. Box 13677, Athens, Greece

Tel: (+30) 210 6208 230 | E-mail: info@bright.gr | www.bright.gr

GREENLIGHT